PRO SPORTS LOCKER

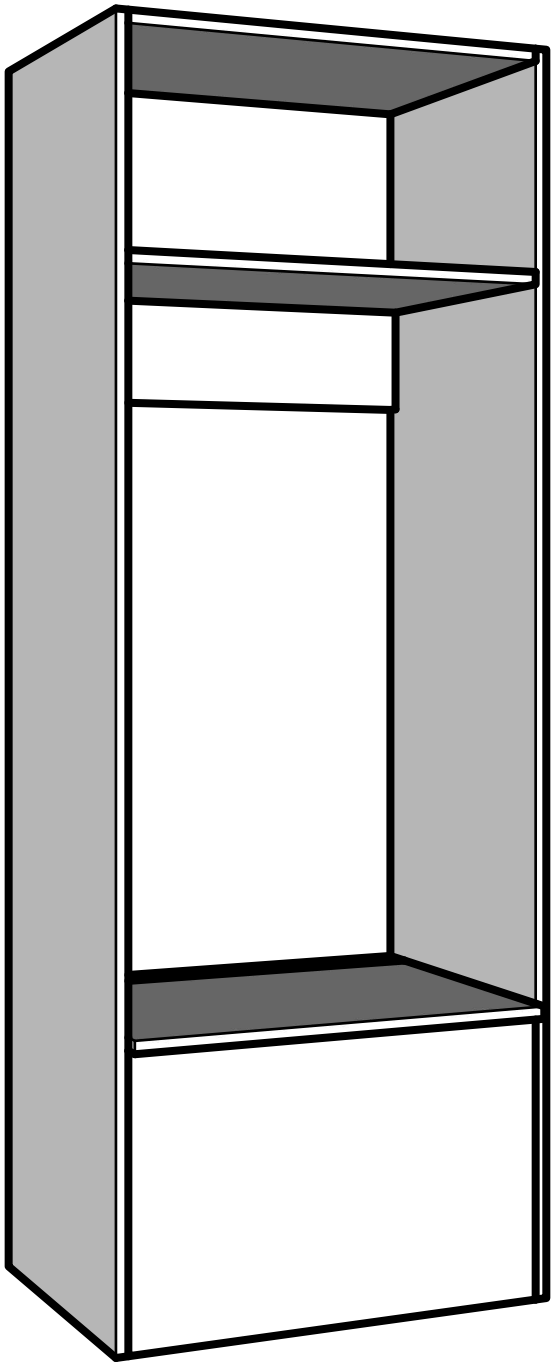

PlayerStay
Since 1989

32x SCREW 1 1/4

25x SCREW 1/2

21x SCREW CAPS

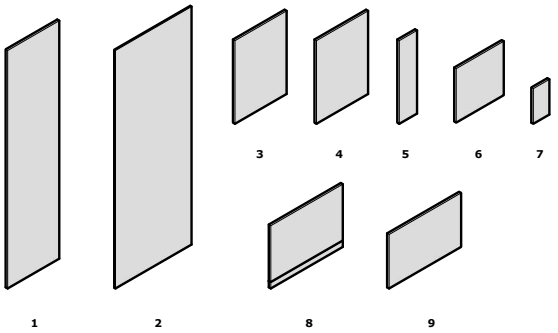

1. 2x SIDE PANEL
2. 1x BACKING
3. 1x TOP SHELF
4. 1x BOTTOM SHELF
5. 1x SHELF SUPPORT
6. 2x SEAT SUPPORT
7. 2x SHELF SPACER
8. 1x SEAT PANEL
9. 1x BACK PANEL

1 SIDE PANELS

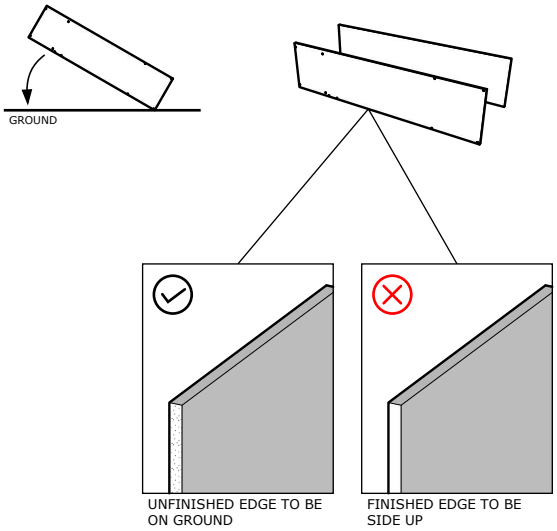

2 TOP SHELF

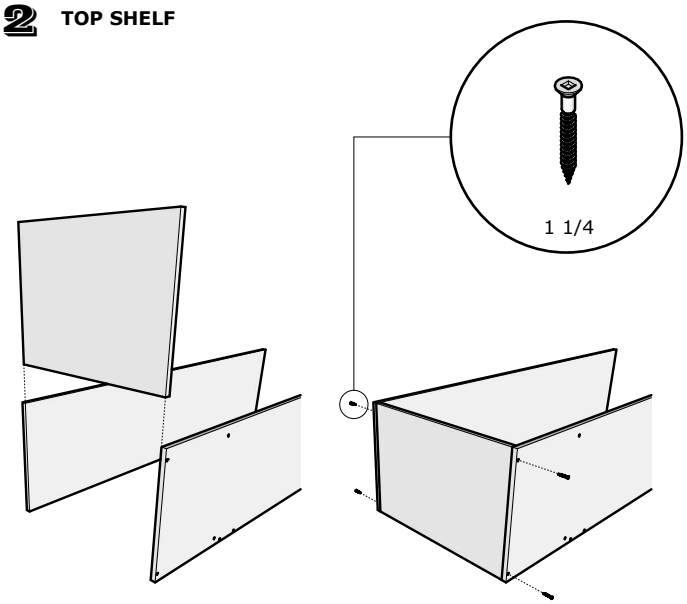

3

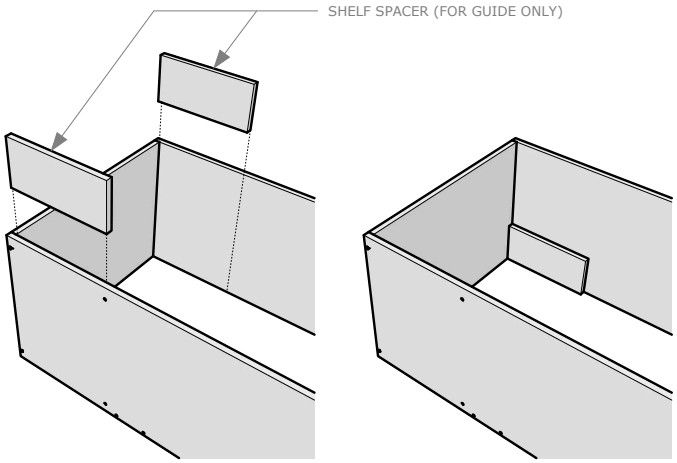

4 BOTTOM SHELF

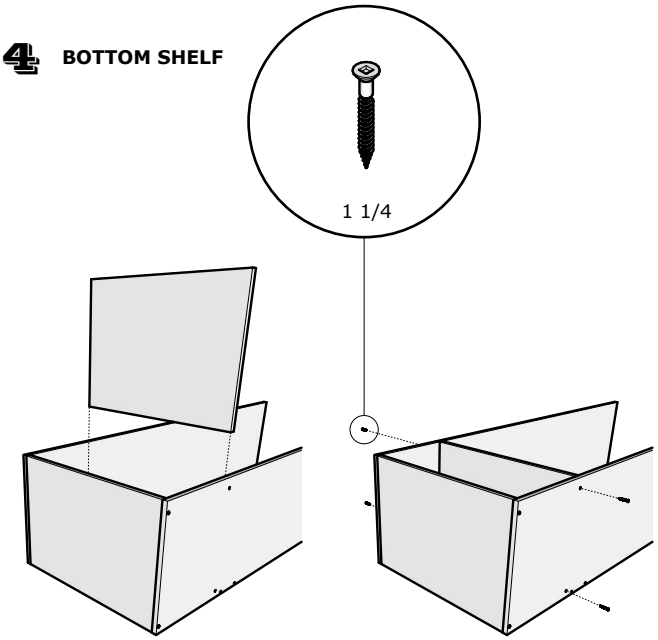

5

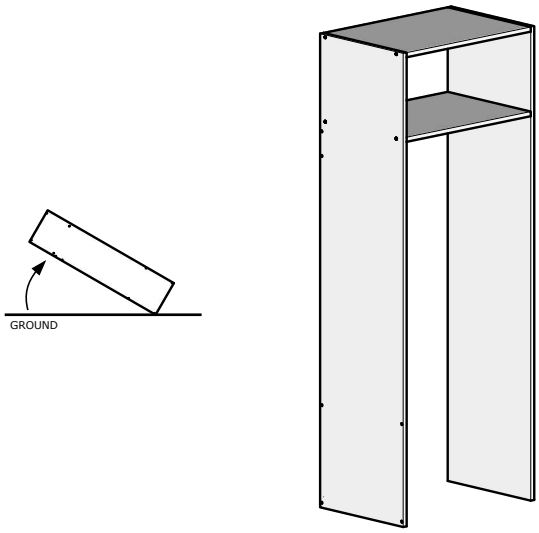

6 SHELF SUPPORT

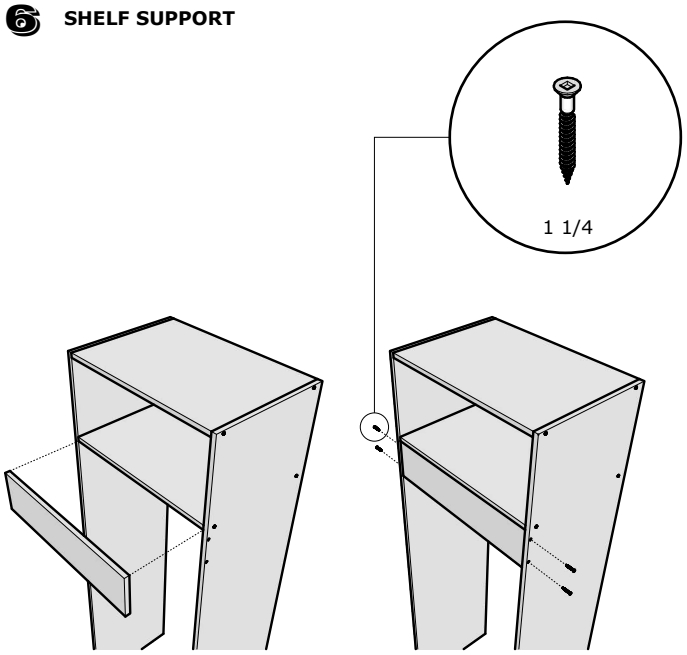

7 BACK PANEL

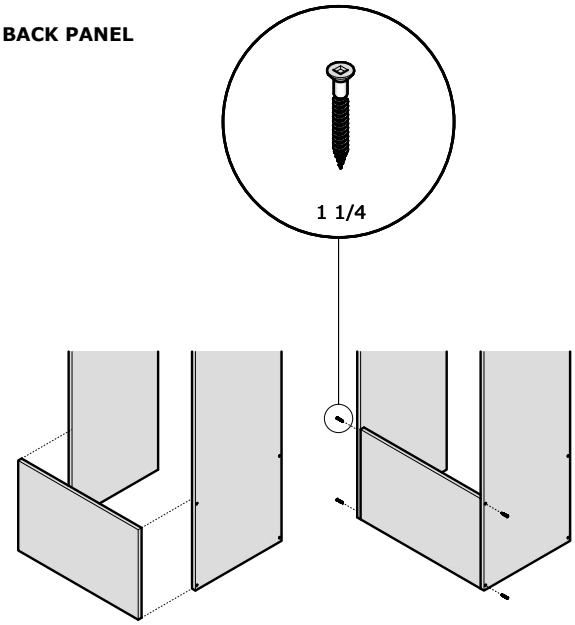

8 SEAT SUPPORT

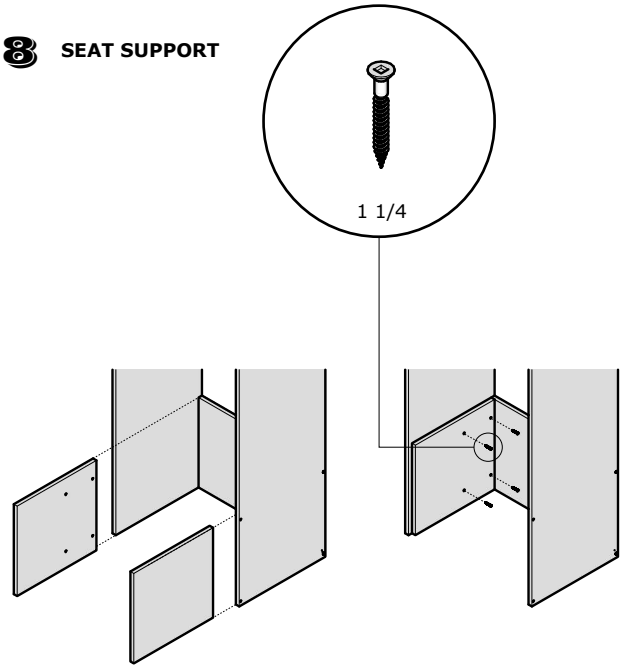

9 FRONT PANEL

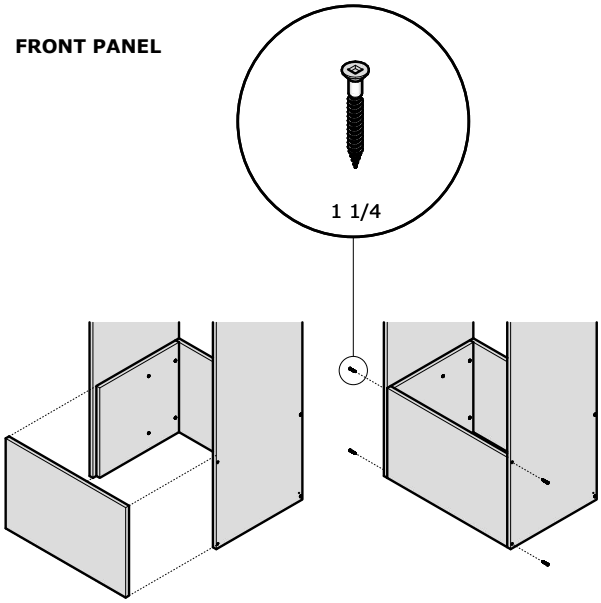

10 SEAT PANEL

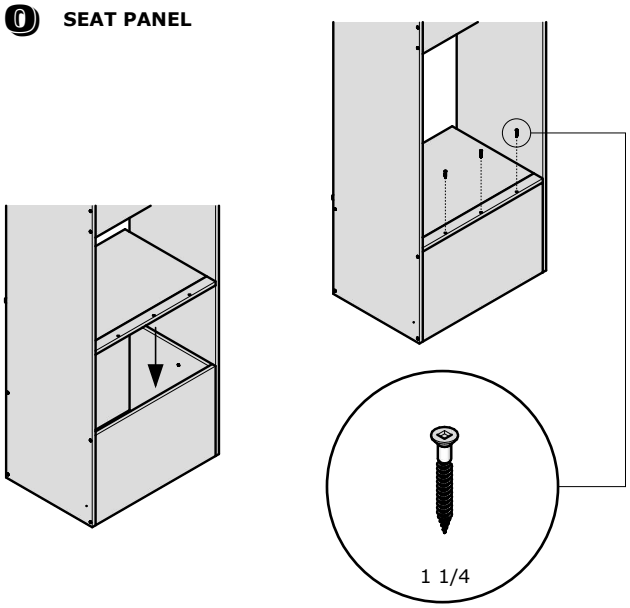

11

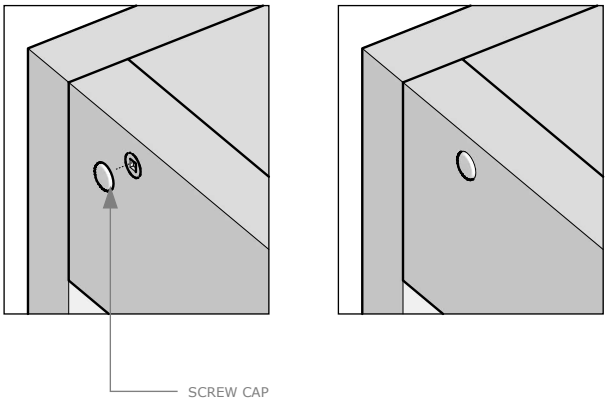

12

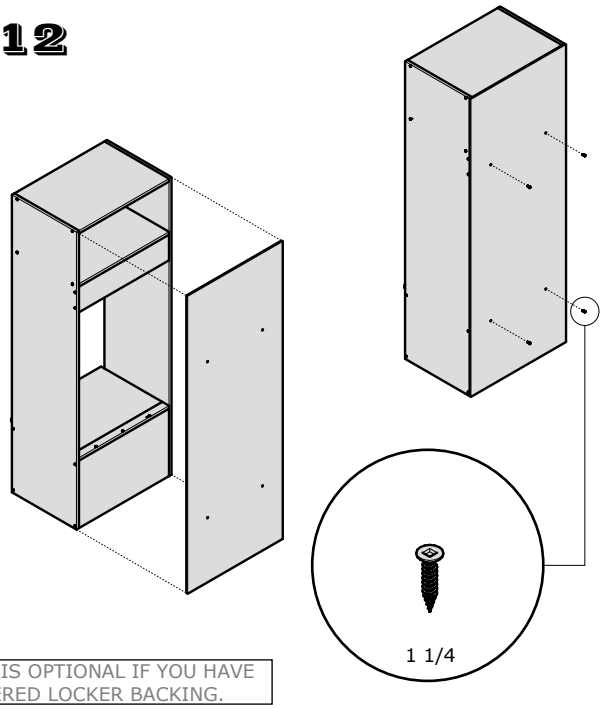

THIS IS OPTIONAL IF YOU HAVE ORDERED LOCKER BACKING.